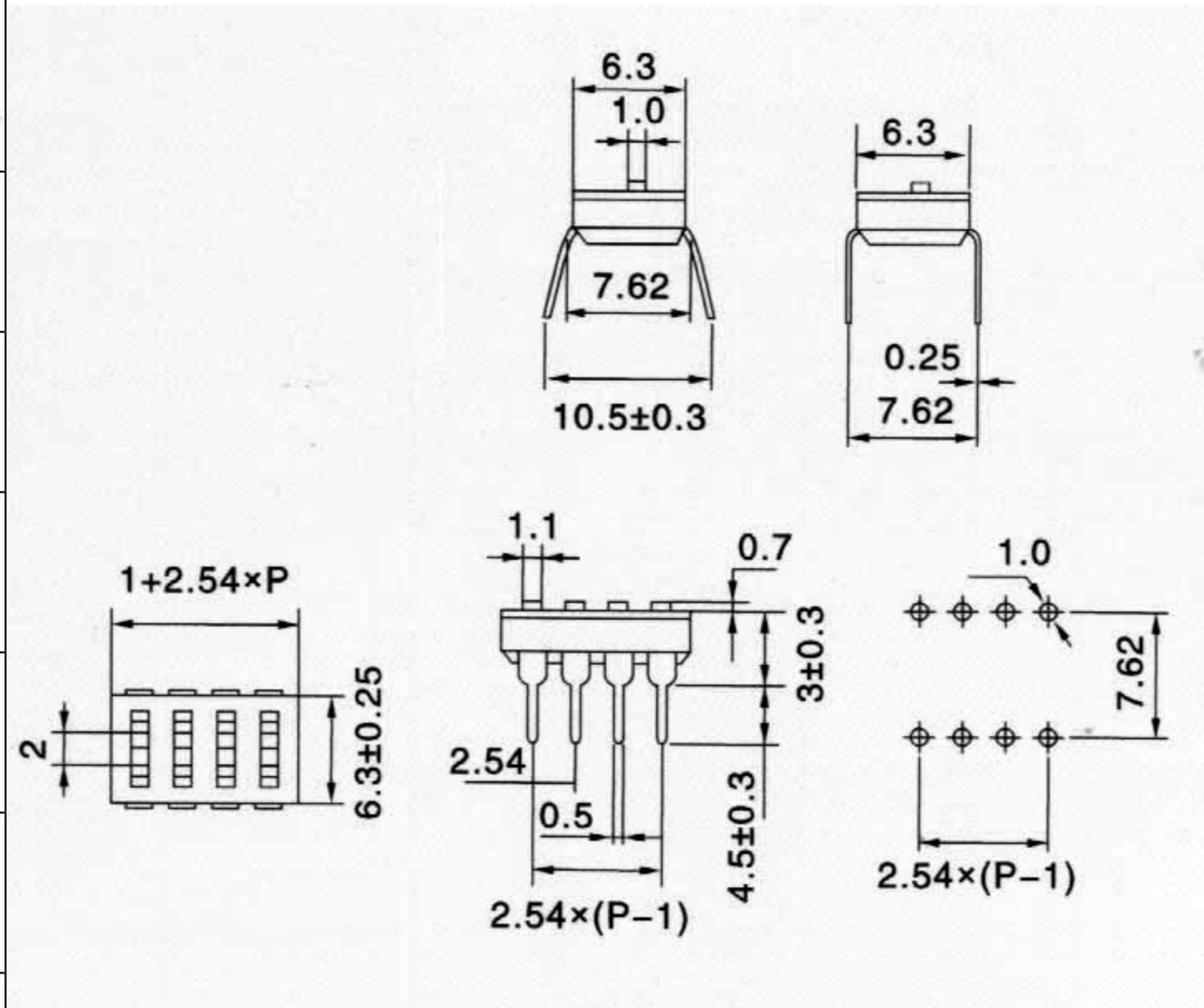

Operation Force: 8N Max
Stroke: 1.0mm
Operation Temp: -40°C to +90°C
Storage Temp: -40°C to +90°C
Electrical Life: 2000 operations cycles per switch 24VDC, 25mA
Non-switching Rating: 100mA, 50VDC
Switching rating: 25mA, 24VDC
Insulation Resistance: 100m Ohm, 500VDC

Dielectric Resistance: 50Hz 500VAC/1minute
Capacitance: 5pF max
Circuit: Single pole single throw

RoHS Compliant

SCHMID-M

APPD.		TOLERANCE .0 ± 0.38 .00 ± 0.25 ANG. ± 3°	PART NAME DIP Switches - Low Profile
DWG. HELEN	SCALE		
DATE 2011/5/31	UNIT M M	SIZE. A4	PART NO. SM-DS-LP-DIL-04
	PAGE 1 OF 1	REV. A	